PIPE SUPPORTS TO BE INSTALLED AS REQUIRED. SOME NOT SHOWN FOR CLARITY

RELIEF VALVES AND EQUIPMENT DRAINS TO BE PIPED TO DRAIN OR VENT BY CONTRACTOR PER CODE REQUIREMENT

ALL BOLTING AND ANCHORING TO BE IN COMPLIANCE WITH LOCAL CODES AND ANY SEISMIC REQUIREMENT

HYDRONIC HEATING PACKAGE SCHEDULE

SYMBOL	MANUFACTURER	MODEL	GAS			CAPACITY, WATER				ELECTRICAL	
			MBTU/HR INPUT (MAX/MIN)	MBTU/HR OUTPUT (MAX/MIN)	EFF	GPM	TDH	HWS	HWR	VOLTS/HZ/PH	FLA
HHM	FLOWTHERM SYSTEMS	CD300NT	300/30	276/28	95%	20	65'	160°F	130°F	460/60/3	5.3

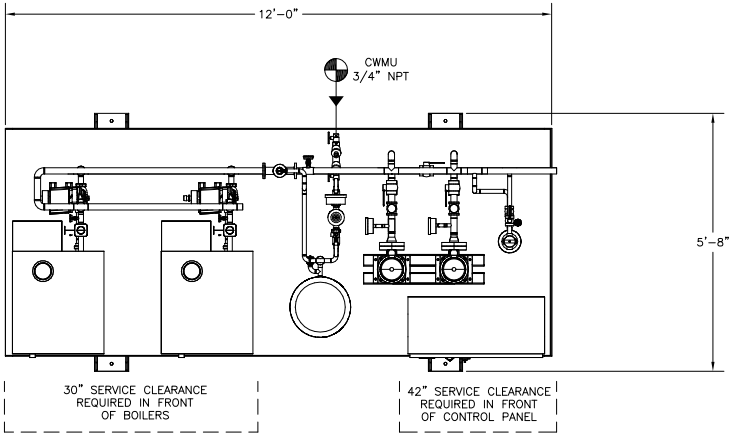

TOP VIEW

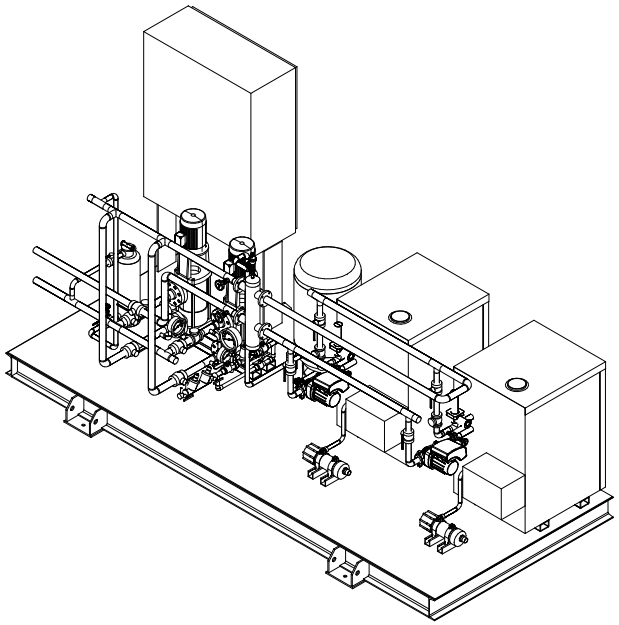

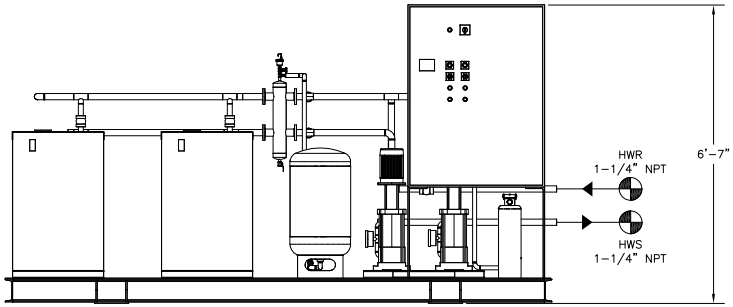

FRONT VIEW

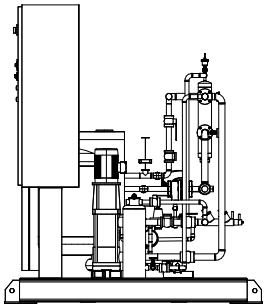

RIGHT END VIEW

DESIGN NOTES:

(1) COMPLETE SYSTEM TO BE HYDRO TESTED TO 125 PSI PRIOR TO SHIPPING.
(2) STEEL FRAME AND COMPONENTS TO RECEIVE TWO COATS OF GRAY MACHINE ENAMEL.
(3) ALL WELDED WATER PIPING TO BE WELDED IN ACCORDANCE TO ASME B31.9
(4) COMPLETE PACKAGE SYSTEM TO BE UL LISTED.

⊕ = DENOTES CONTRACTOR POINT OF CONNECTION

REV	DESCRIPTION	BY	DATE
A	ENGINEERING RELEASE	ND	08/08/17

UL LISTED
PACKAGED PUMPING SYSTEMS & HEAT TRANSFER SYSTEMS

APPROXIMATE SHIPPING WEIGHT: 3,045 LBS.
APPROXIMATE OPERATING WEIGHT: 3,380 LBS.

THIS DRAWING AND THE INFORMATION DEPICTED THEREIN IS THE PROPERTY OF FLOWTHERM SYSTEMS, A DIVISION OF CALIFORNIA HYDRONICS CORP., COPIES ARE ISSUED IN STRICT CONFIDENCE AND SHALL NOT BE REPRODUCED OR COPIED, OR USED AS THE BASIS FOR THE MANUFACTURING OR SALE OF PRODUCT WITHOUT PRIOR WRITTEN PERMISSION OF CALIFORNIA HYDRONICS CORP.

JOB NAME: –
CONTRACTOR: –

DRWN.	DATE	CKD.	APPROVED
ND	08/08/17	–	–

TOLERANCES UNLESS OTHERWISE SPECIFIED

DEC.	FRAC.	ANGLE	SIZE	SCALE
.500"	1/2"	5'	D	3/4" = 1'-0"

FLOWTHERM Systems

DRAWING TITLE: HYDRONIC HEATING MODULE

FAB No.	DRAWING No.	REV
–	HHM-CD300NT	A