RELIEF VALVES AND EQUIPMENT DRAINS TO BE PIPED TO DRAIN OR VENT BY CONTRACTOR PER CODE REQUIREMENT

ALL BOLTING AND ANCHORAGE TO BE IN COMPLIANCE WITH LOCAL CODES AND ANY SEISMIC REQUIREMENTS.

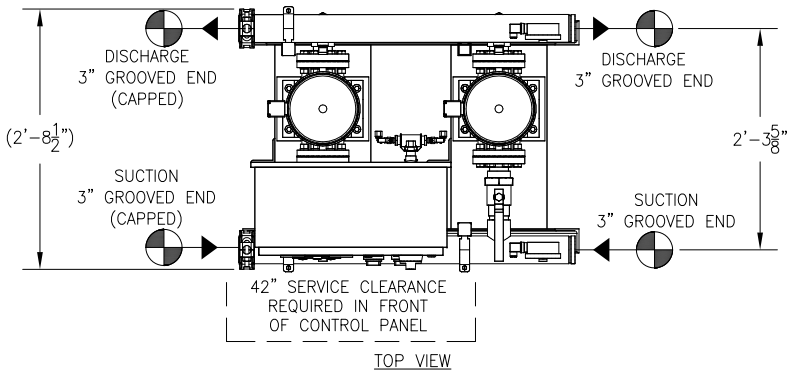

TOP VIEW

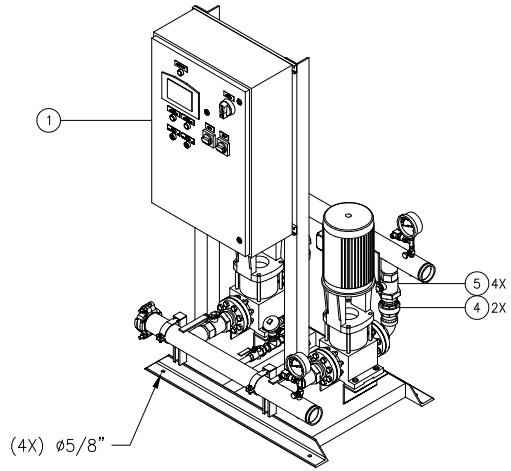

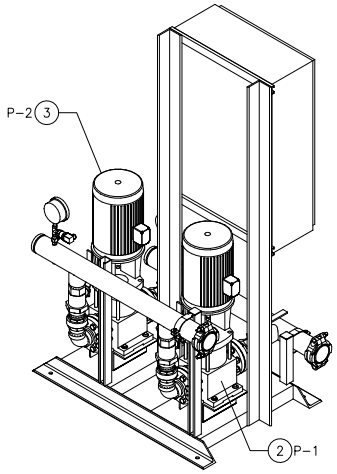

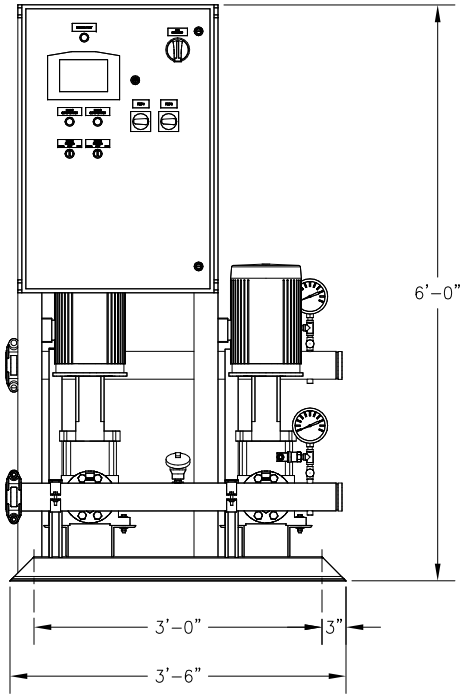

FRONT VIEW

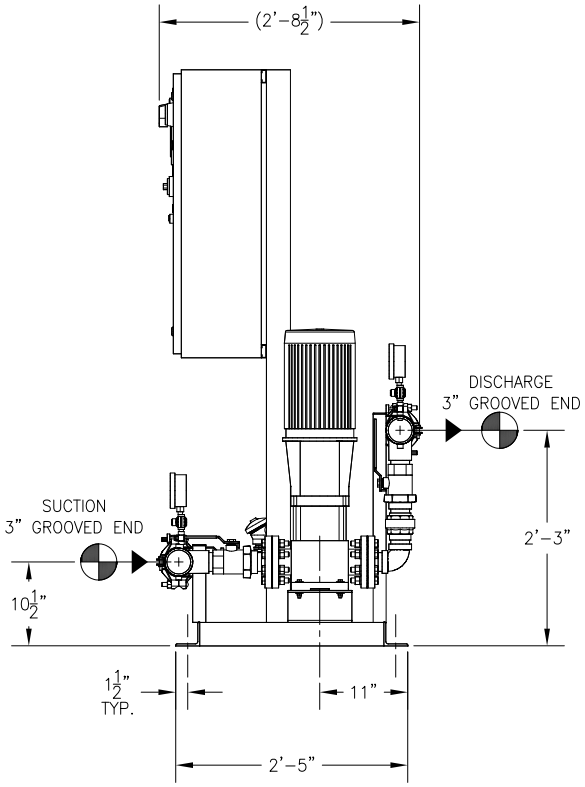

RIGHT END VIEW

CONSTRUCTION NOTES:

1. SUCTION AND DISCHARGE HEADERS ARE GROOVED ON BOTH ENDS.
2. END CAPS CAN BE PLACED ON EITHER END OF HEADERS.
3. SYSTEM DESIGNED FOR INDOOR INSTALLATION.

– GPM	– PSI	– PSI
TOTAL FLOW	TOTAL DISCHARGE PRESSURE	AVAILABLE PRESSURE
TOTAL SYSTEM CAPACITY		

ITEM	TAG	MANUFACTURER	SERIES	MODEL	GPM	TDH	HP	RPM	VOLTS/HZ/PH	ENCLOSURE
3	P-2	GOULDS	ESV	15SVG-2	–	–	5	3500	460 / 60 / 3	TEFC P.E.
2	P-1	GOULDS	ESV	15SVG-2	–	–	5	3500	460 / 60 / 3	TEFC P.E.

PUMP SCHEDULE

ITEM	QTY	TAG	DESCRIPTION
10	–	–	–
9	–	–	–
8	–	–	–
7	–	–	–
6	–	–	–
5	4	–	APOLLO SINGLE UNION BALL VALVE MODEL 70LF-308-01 – 2"
4	2	–	BONOMI IN-LINE CHECK VALVE – 2"
3	1	P-2	GOULDS ESV MULTI-STAGE PUMP MODEL 15SVG-2
2	1	P-1	GOULDS ESV MULTI-STAGE PUMP MODEL 15SVG-2
1	1	–	AQUALOGIC XL CONTROL PANEL

EQUIPMENT SCHEDULE

GENERAL NOTES:

(1) SINGLE POINT POWER CONNECTION AT CONTROL PANEL.

(2) HYDRO PRESSURE CHECK AT 125 PSI.

(3) ASSEMBLED SYSTEM TO BE PAINTED WITH INDUSTRIAL MACHINE ENAMEL PRIOR TO SHIPMENT.

= DENOTES CONTRACTOR POINT OF CONNECTION

LISTED
PACKAGED PUMPING SYSTEMS & HEAT TRANSFER SYSTEMS

APPROXIMATE SHIPPING WEIGHT: 960 LBS.
APPROXIMATE OPERATING WEIGHT: 990 LBS.

THIS DRAWING AND THE INFORMATION DEPICTED THEREIN IS THE PROPERTY OF FLOWTHERM SYSTEMS, A DIVISION OF CHC. COPIES ARE ISSUED IN STRICT CONFIDENCE AND SHALL NOT BE REPRODUCED, COPIED, OR USED AS THE BASIS FOR MANUFACTURING OR SALE OF PRODUCT WITHOUT PRIOR WRITTEN PERMISSION OF CHC.

PROJECT NAME: –

CUSTOMER: –

DRAWN BY	DATE	CHECKED BY	APPROVED BY
ACD	09/11/19		

TOLERANCES UNLESS OTHERWISE SPECIFIED

DEC.	FRAC.	ANGLE	SIZE	SCALE
.500"	1/2"	5°	C	1" = 1'-0"

FLOWTHERM systems
HAYWARD, CALIFORNIA

DRAWING TITLE: FMV2.1-5-XL – VARIABLE SPEED DUPLEX PRESSURE BOOSTER

FAB No.	DRAWING No.	REV
–	FMV2.1-5-XL	1

F:\PACKAGED SYSTEM DRAWINGS\FTPB\FMV\FMV2\FMV2.1-X-XL\FMV2.1-5-XL.DWG